DIMENSIONI D'INGOMBRO – OVERALL DIMENSIONS – DIMENSIONS D'ENCOMBREMENT RAUMBEDARF – DIMENSIONES TOTALES – DIMENSÕES

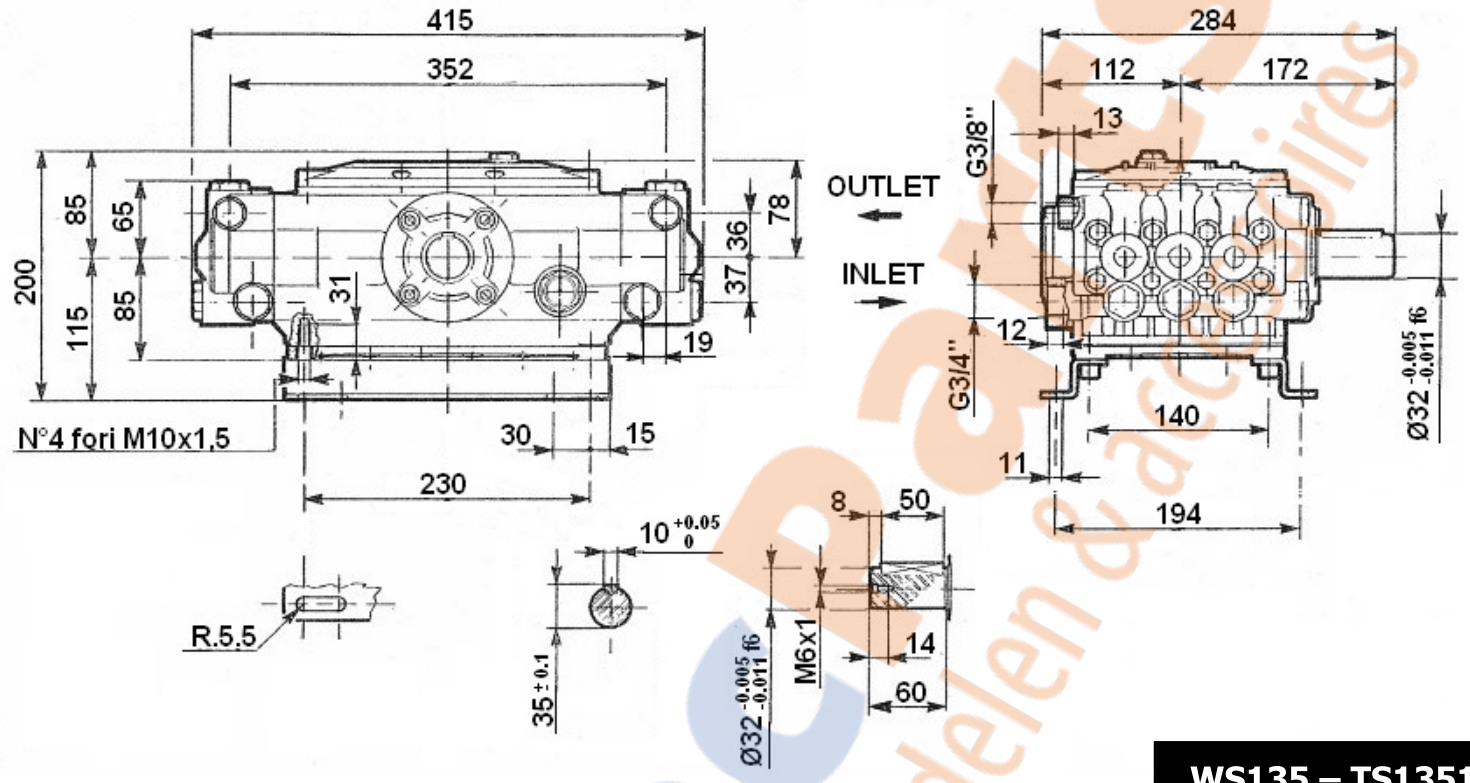

WS135 – TS1351
W163 – T1631
W203 – T2031

DIS. COD. 48.2141.00

AlteeParts
hogedrukonderdelen & accessoires